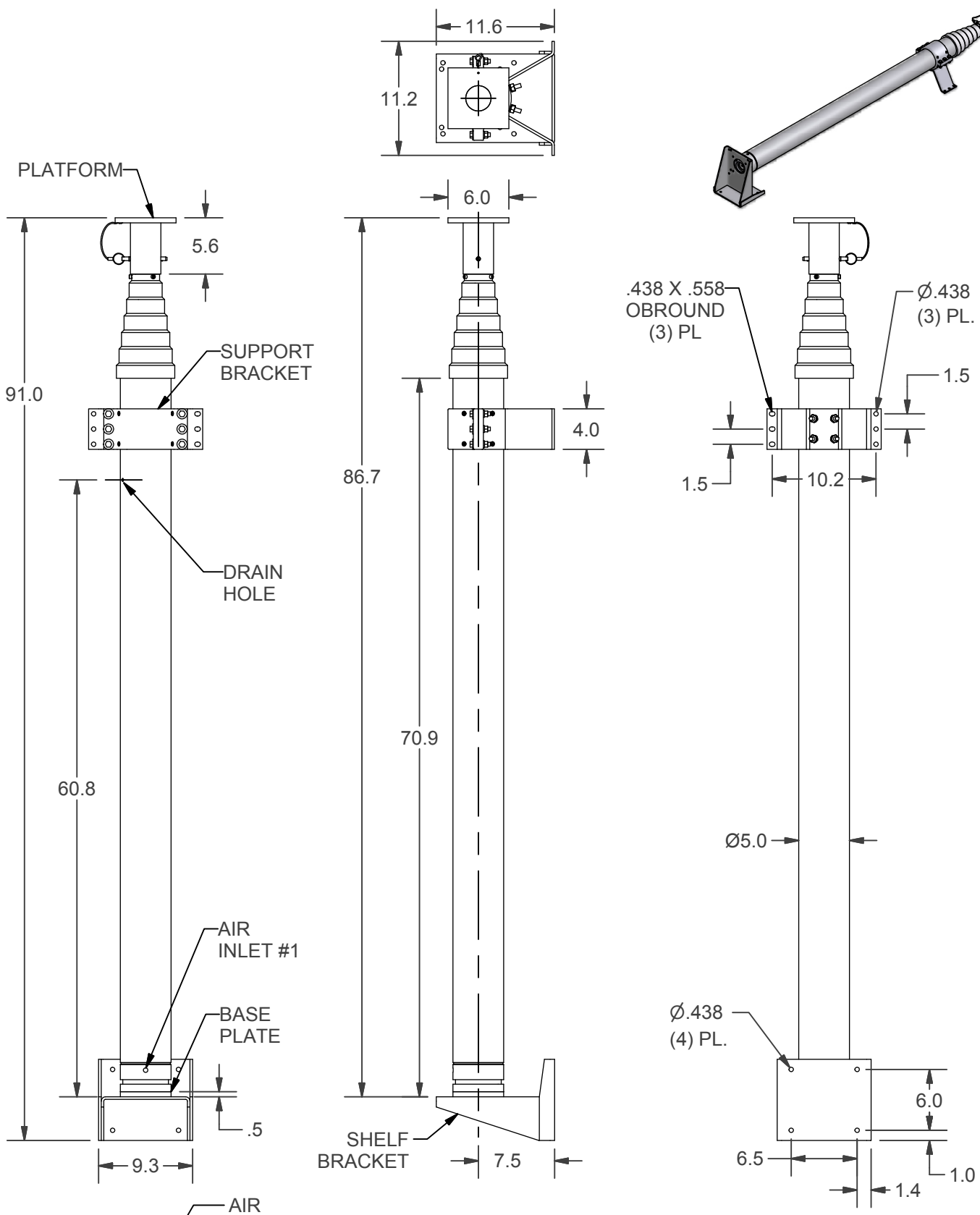

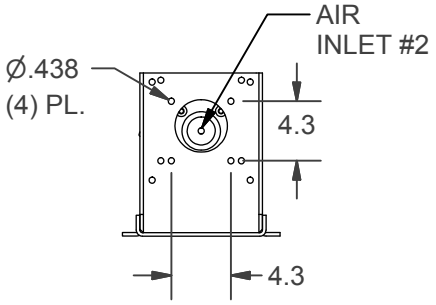

PROPRIETARY AND CONFIDENTIAL
THE INFORMATION CONTAINED IN THIS DRAWING IS THE SOLE PROPERTY OF THE WILL-BURT COMPANY ANY REPRODUCTION IN PART OR WHOLE WITHOUT THE WRITTEN PERMISSION OF THE WILL-BURT COMPANY IS PROHIBITED.

UNLESS OTHERWISE SPECIFIED DIMENSIONS ARE IN INCHES

ALL DIMENSIONS ARE REFERENCE

THIRD ANGLE PROJECTION

WILL-BURT

AN EMPLOYEE OWNED COMPANY
ORRVILLE, OH

TITLE
PNEUMATIC MAST INSTALLATION DIMENSIONS

MODEL
7-34-168

APRIL-09