REVISION HISTORY				
ECN	REV	DESCRIPTION	DATE	APPROVED
11114	A	RESTRUCTURED BOM	6/28/2012	RCC\

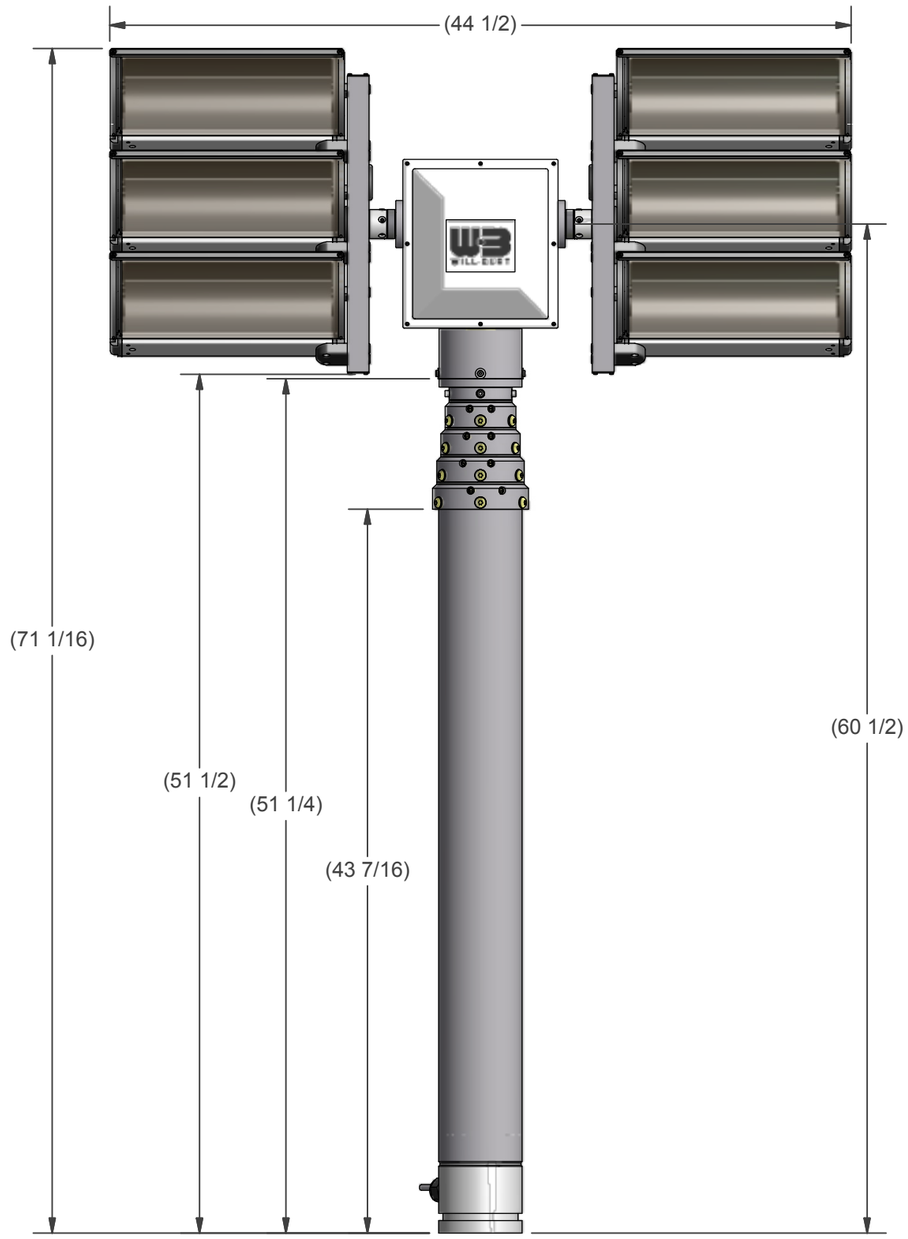

BOM			
ITEM	QTY	PART NUMBER	DESCRIPTION
1	REF	4825301	VRT MAST L.D. 4.3 - 15 IWM
2	1	4742507	RCP ASSEMBLY NS VERTICAL
3	1	4746303	KIT, LIGHT OPT. 6000W (6) X 1000 220V
4	1	4267401	NS VERTICAL ACCESSORY KIT (Not Shown)
5	0	WD-46276	WIRING DIAGRAM (FOR REFERENCE ONLY)
6	0	4742507	DRAWING

APPROX. WT:101.7 lbmass

THIRD ANGLE PROJECTION

UNLESS OTHERWISE SPECIFIED DIMENSIONS ARE IN INCHES.

TOLERANCES ON DECIMALS
0 = ± 0.030
00 = ± 0.010
000 = ± 0.005
FRACTIONAL ± 1/64"

ANGLES ± 1/2°

1. ALL INSIDE EDGES TO HAVE .005" TO .035" FILLETS.
2. ALL OUTSIDE EDGES TO HAVE .005" TO .015" CHAMFER OR RADIUS.

125 √ *ON ALL MACHINED SURFACES*

PROPRIETARY AND CONFIDENTIAL

THE INFORMATION CONTAINED IN THIS DRAWING IS THE SOLE PROPERTY OF THE WILL-BURT COMPANY ANY REPRODUCTION IN PART OR WHOLE WITHOUT THE WRITTEN PERMISSION OF THE WILL-BURT COMPANY IS PROHIBITED.

APPROVALS	DATE
DRAWN RCC	6/28/2012
CHECKED	

WILL-BURT

AN EMPLOYEE OWNED COMPANY
ORRVILLE, OH

TITLE

VRT-6000-6 OPT-220V

SIZE	DWG NO	REV
B	720049121	A

PN: 720049121

SHEET 1 OF 1

K:\Inventor WorkGroups\WS-Campbell\Inventor\720000000\720049121.idw